ECLIPSE® 05

METALLIC EXTERNAL GEAR PUMP

Eclipse pumps represent a dramatic advance in pump technology. Combining proven design principles with state-of-the-art engineering, it is the most safe, simple, and reliable pump on the market today. Service only takes minutes, thus reducing process downtime and maintenance costs. It is commonly used for applications in industries such as chemical processing, petrochemical, and water treatment.

Applications
pH control, odor control, acids, caustic, hydrogen peroxide, ammonia

Flow
up to 1.6 gpm (6.1 lpm)

Differential Pressure
up to 150 psi (10.3 bar)

Temperature
up to 300°F (149°C)

- Available in 316LSS for chemical resistance
- Magnetically driven, eliminating the need for costly mechanical seals
- Patented replaceable housing liner reduces repair costs
- One-piece gear and shaft assembly eliminates common gear failures at the keyway
- Designed for easy maintenance

Zero Leakage
- Sealless design
- Zero emissions of hazardous or regulated chemicals

Built for the harshest environments
- Ideal fit for many medium to highly corrosive liquids
- Fully encapsulated magnets
- Superior chemical resistance

Ease of maintenance
- Front pull-out design
- Quick and easy service
- Piping and electrical stay in place
- Reduced downtime
- KOPkit® (Keep on Pumping kit) saves time and money
- Simplified orders and inventory

Controls
- Pulsafeeder RV Controller: intelligent motor speed

PULSAFEEDER®
ENGINEERED PRODUCTS

SPECIFICATIONS

Gear type	External spur gear
Port size & type	1/2” NPT or BSPT
Flange	150# ANSI DIN 10/15 PN 16
Direction of rotation	Bi-directional
Theoretical displacement	0.113 US gal / 100 Rev
Max differential pressure	150 psi (10.3 bar)
Max allowable working pressure	300 psi (20.7 bar)
Max speed	1750 RPM
Max speed metal / metal gears	1450 RPM
Max flow	1.6 gpm (6.1 lpm)
Viscosity	5,000 cPs
Max temp	up to 300°F (149°C)
Min temp	-40°F (-40°C)
Bearing type	Sleeve bearing
Magnetic torque rating @ 68°F (20°C)	Neodymium: 77 in/lb Samarium Cobalt: 75.6 in/lb
Magnetic temp rating	Neodymium: 300°F (149°C) Samarium Cobalt: 450°F (232°C)
Motor frame size	NEMA 56C, 143/5 TC IEC 71, 80 B3/B14
Pump weight	15.0 lbs. (6.8 kg) less motor, approximate
Standards	ATEX, CE

MATERIALS OF CONSTRUCTION

Base material	316LSS
Liner	Carbon Reinforced PTFE
Bearings	Carbon (Graphite), Silicon carbide (Graphite-impregnated), or PTFE
O-rings	PTFE, Perfluoroelastomer
Shafts	316LSS, Alumina Ceramic
Drive gear	316LSS, PTFE
Idler gear	316LSS, PEEK, PTFE
Magnet	Neodymium, Samarium Cobalt

DIMENSIONS

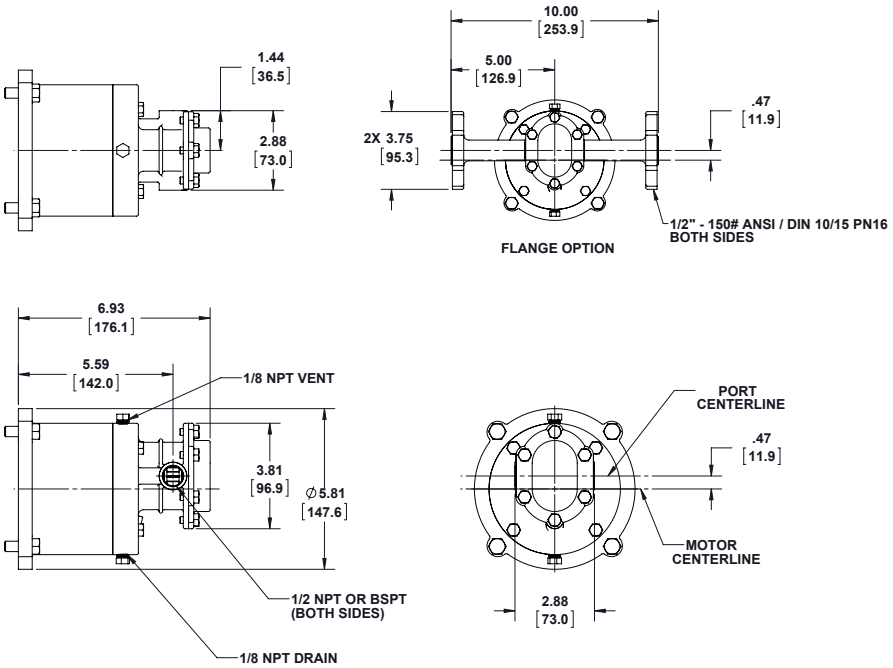

Inches
Millimeters

The dimensions given may differ depending on pump configuration.

FLOW & PRESSURE ENVELOPE

(1 cPs, 1/2 HP / .55 kW, Specific Gravity 1.0)

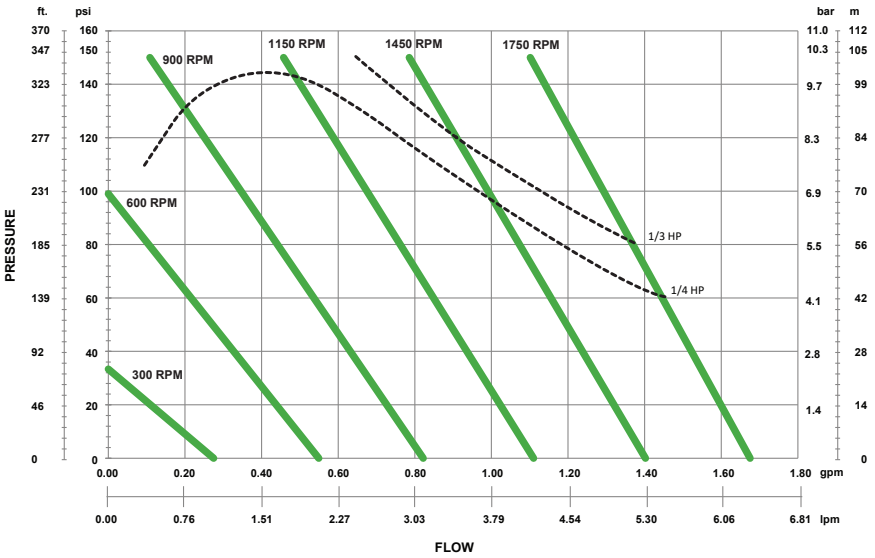

Pulsafeeder, Inc.
2883 Brighton Henrietta Town Line Rd.
Rochester, NY 14623
Phone: +1 (585) 292-8000
pulsa@idexcorp.com • **pulsa.com**

Pulsafeeder is an ISO 9001 Certified Company.

© Copyright 2022 Pulsafeeder.
All rights reserved.