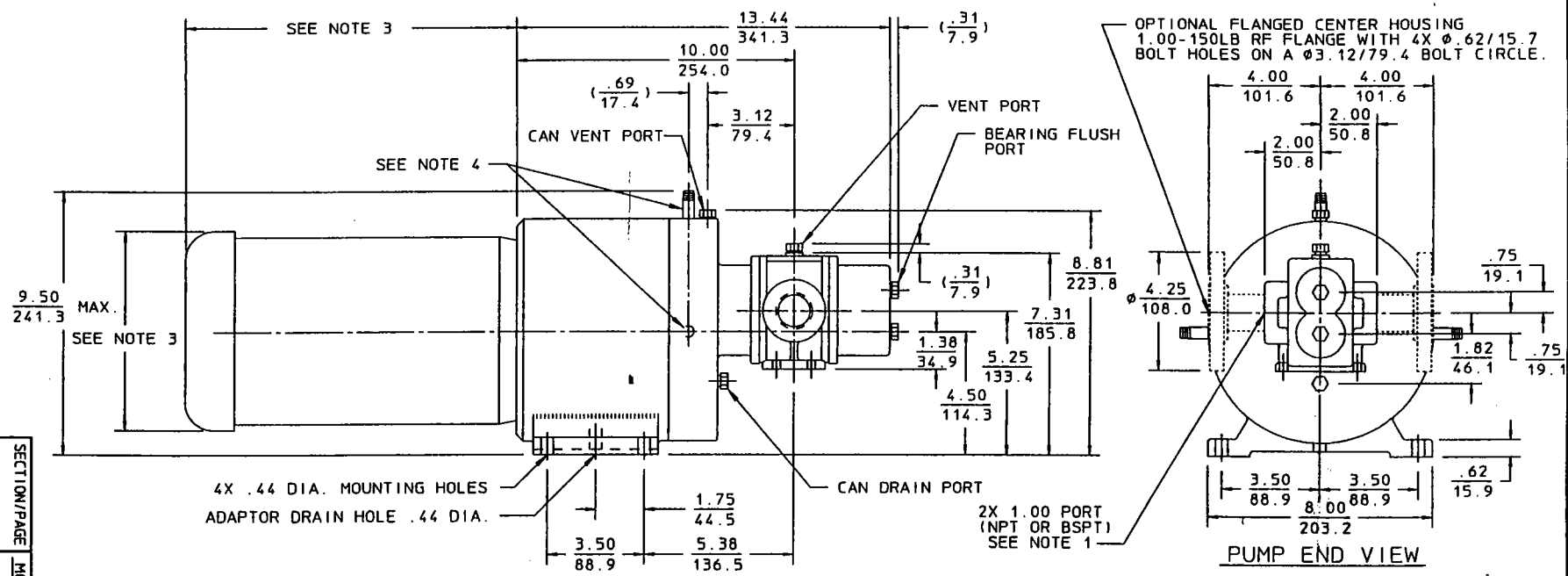

NOTE:

1.) SUCTION AND DISCHARGE PORTS DEPENDENT ON DIRECTION OF ROTATION.

2.) ALL STANDARD AND OPTIONAL PORT CONNECTION PIPE PLUGS ARE 1/8" NPT.

3.) MOTOR DIMENSIONS VARY BY MANUFACTURER-
CONSULT MOTOR MANUFACTURERS DRAWING FOR SPECIFICS.
MOTOR ADAPTOR WILL ACCOMMODATE MOTOR FRAME SIZE, D100LC.

4.) (2) 1/8" NPT PIPE CONNECTION PORTS ARE STANDARD WITH DOUBLE CAN OPTION.
STANDARD ASSEMBLY IS LEFT/TOP CONNECTION PORT ORIENTATION WHEN VIEWED FROM PUMP END.
CUSTOMER TO SPECIFY WHEN RIGHT/TOP CONNECTION PORT ORIENTATION IS REQUIRED.

5.) FLANGE SIZE IS IN INCHES.

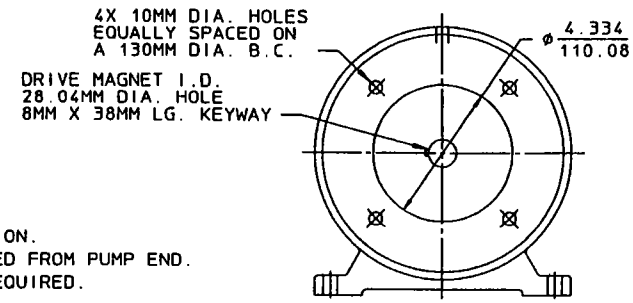

MOTOR ADAPTOR
METRIC C-FACE BOLT PATTERN

REF	REVISION UPDATE	DATE
B	ADDED OPTIONAL FLANGE	03/27/01

SECTION/PAGE
EFFECTIVE 03/27/01
SUPERSEDES 04/01/98
MODEL GMH8/302

ALL DIMENSIONS ARE IN INCHES

Isochem FULSHUFFLER A UNI of DEX Corporation

DIMENSIONAL DRAWING
GMH8 PUMP UNMOUNTED
METRIC D100LC FR MOTOR

DWN BY: CLA
DATE: 04/04/94

SD-2788